Parts Information:
Hand Cranked Hose Reel 80mtr Capacity
Model No: GH80

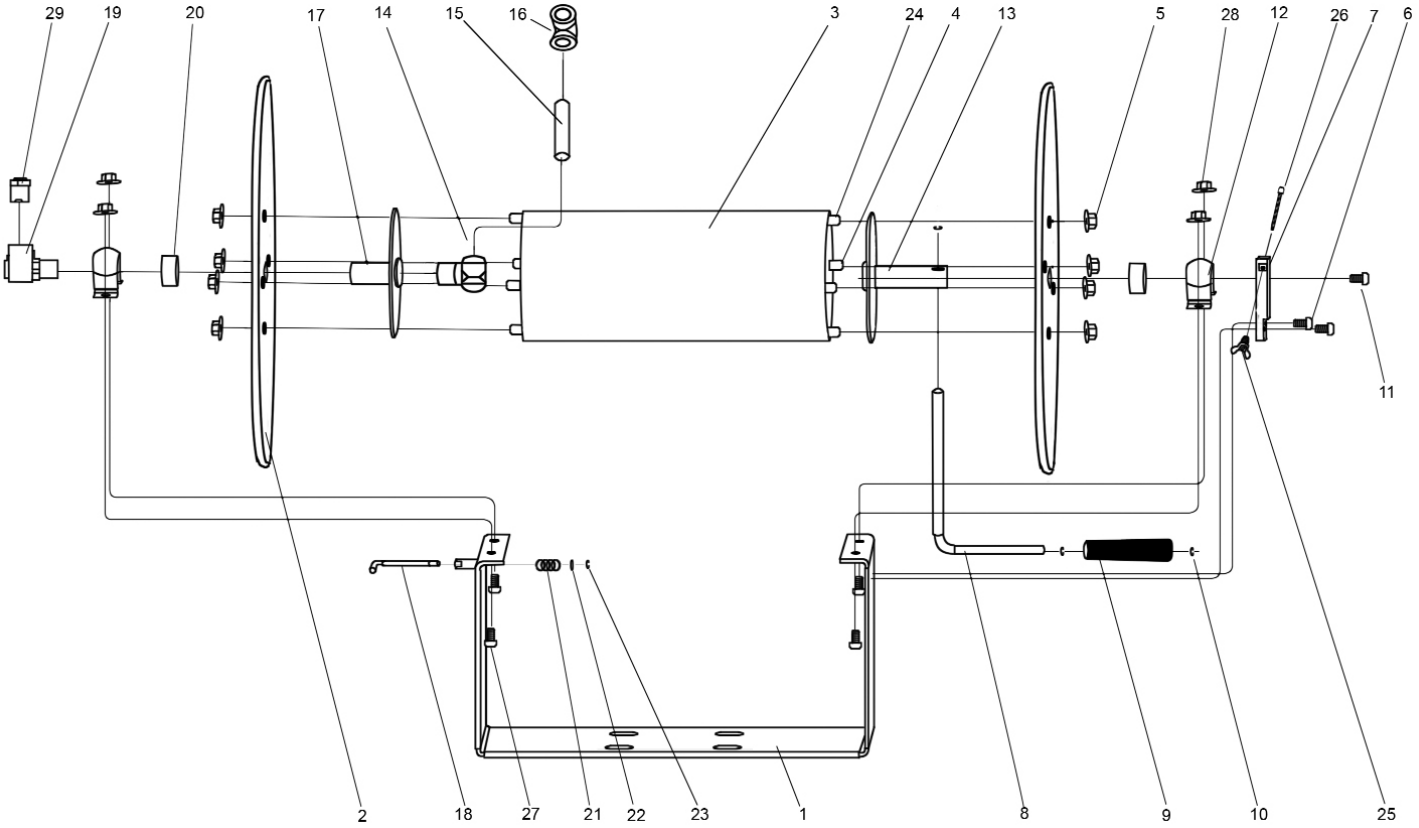

Item	Part No.	Description
1	GH80.01	Base
2	GH80.02	Flange
3	GH80.03	Drum
4	GH80.04	Screw Lever
5	NLN10.S	Nyloc Nut M10 Zinc (Single)
6	GH80.06	Locking Bolt
7	GH80.07	Bracket
8	GH80.08	Handle Axle
9	GH80.09	Handle
10	GH80.10	Circlip
11	GH80.11	Bolt M8x10
12	GH80.12	Bearing Assembly
13	GH80.13	Support Assembly
14	GH80.14	Fitting
15	GH80.15	Link Tube

Item	Part No.	Description
16	GH80.16	Fitting
17	GH80.17	Support Assembly
18	GH80.18	Locking Pin
19	GH80.19	Swivel Valve Assembly
20	GH80.20	Plastic Bushing
21	GH80.21	Spring
22	GH80.22	Washer
23	GH80.23	E-Ring
24	GH80.24	Stud
25	SM1303.24	Carriage Bolt M6x60
26	GH80.26	Nut
27	SS816.S	Hex Head Set Screw M8x16mm Single
28	NLN8.S	Nyloc Nut M8 Zinc Din 985 (Single)
29	GH80.29	Fitting

NOTE: It is our policy to continually improve products and as such we reserve the right to alter data, specifications and component parts without prior notice.
IMPORTANT: No liability is accepted for incorrect use of product.
WARRANTY: Guarantee is 12 months from purchase date, proof of which will be required for any claim.

Sealey Group, Kempson Way, Suffolk Business Park, Bury St Edmunds, Suffolk. IP32 7AR
01284 757500 | 01284 703534 | sales@sealey.co.uk | www.sealey.co.uk