Parts Information:

Platform Truck Pneumatic Tyres 200kg Capacity

Model No: CST996

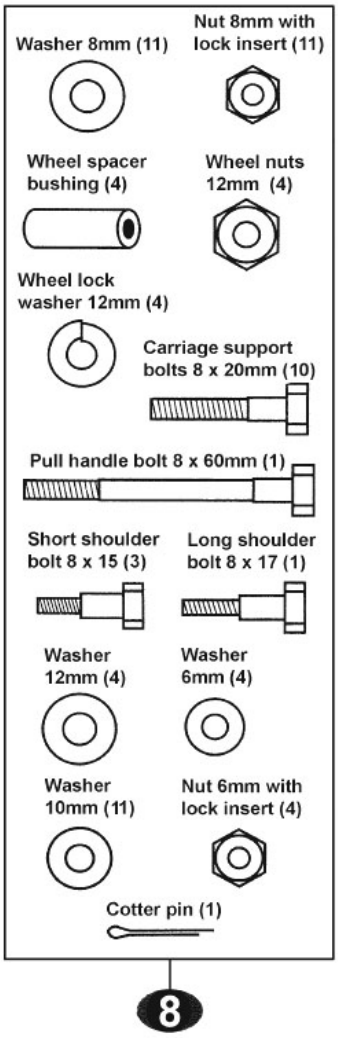

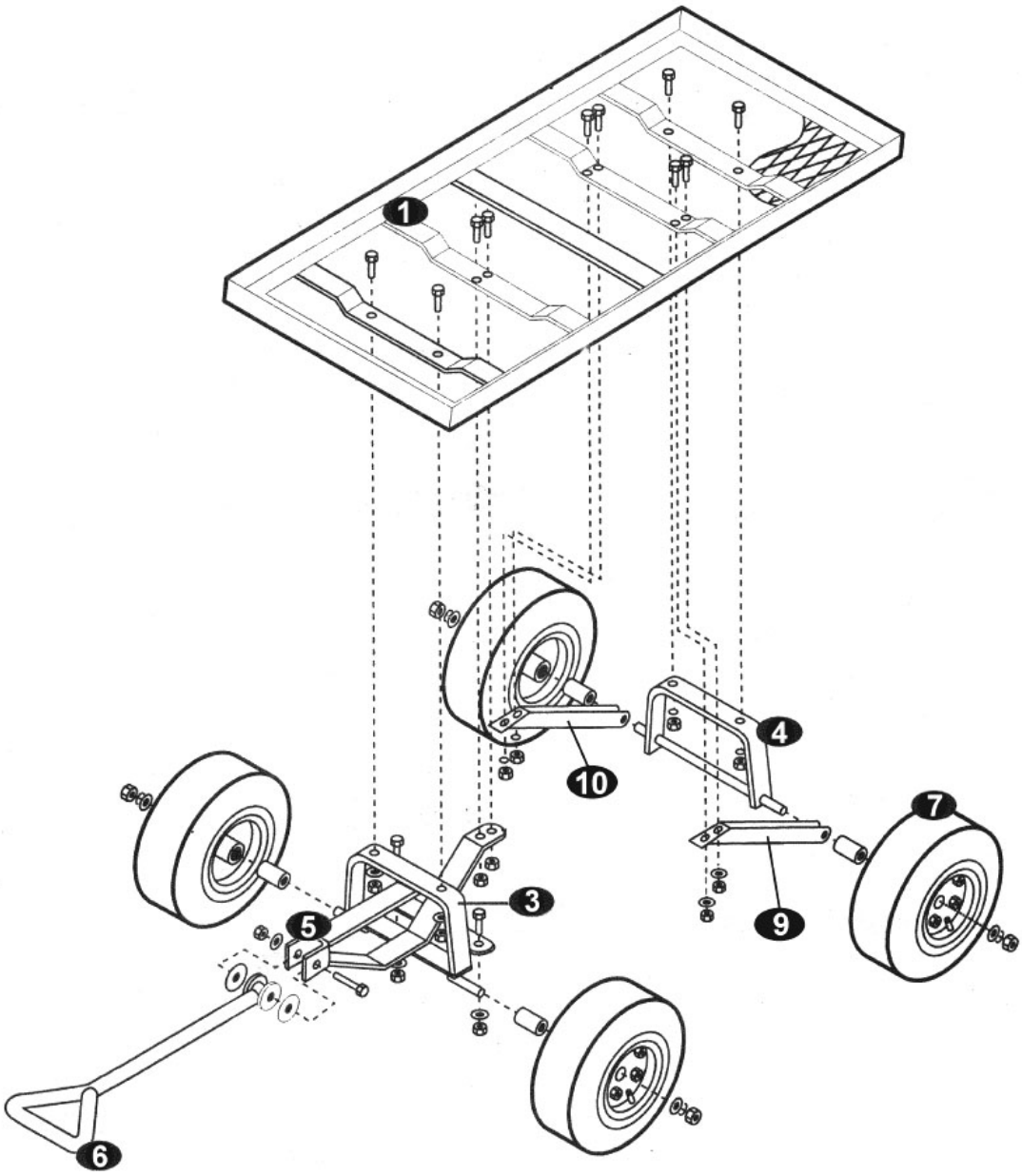

Item	Part No.	Description
1	CST996.01	Flat Bed
--	CST996.02	Front Axle Support (NOT SHOWN)
3	CST996.03	Front Axle Support
4	CST996.04	Rear Axle Support
5	CST996.05	Centre Axle Brace Ass'y

Item	Part No.	Description
6	CST996.06	Handle
7	CST997.05	Wheel 4.10/3.50-4
8	CST996.FK	Fitting Kit Complete
9	CST996.09	Left Rear Axle Brace
10	CST996.10	Right Rear Axle Brace

NOTE: It is our policy to continually improve products and as such we reserve the right to alter data, specifications and component parts without prior notice.
IMPORTANT: No liability is accepted for incorrect use of product.
WARRANTY: Guarantee is 12 months from purchase date, proof of which will be required for any claim.

Sealey Group, Kempson Way, Suffolk Business Park, Bury St Edmunds, Suffolk. IP32 7AR
01284 757500 | 01284 703534 | sales@sealey.co.uk | www.sealey.co.uk