Parts Information:
Portable Soda Blasting Kit 18kg Capacity
Model No:PSB40

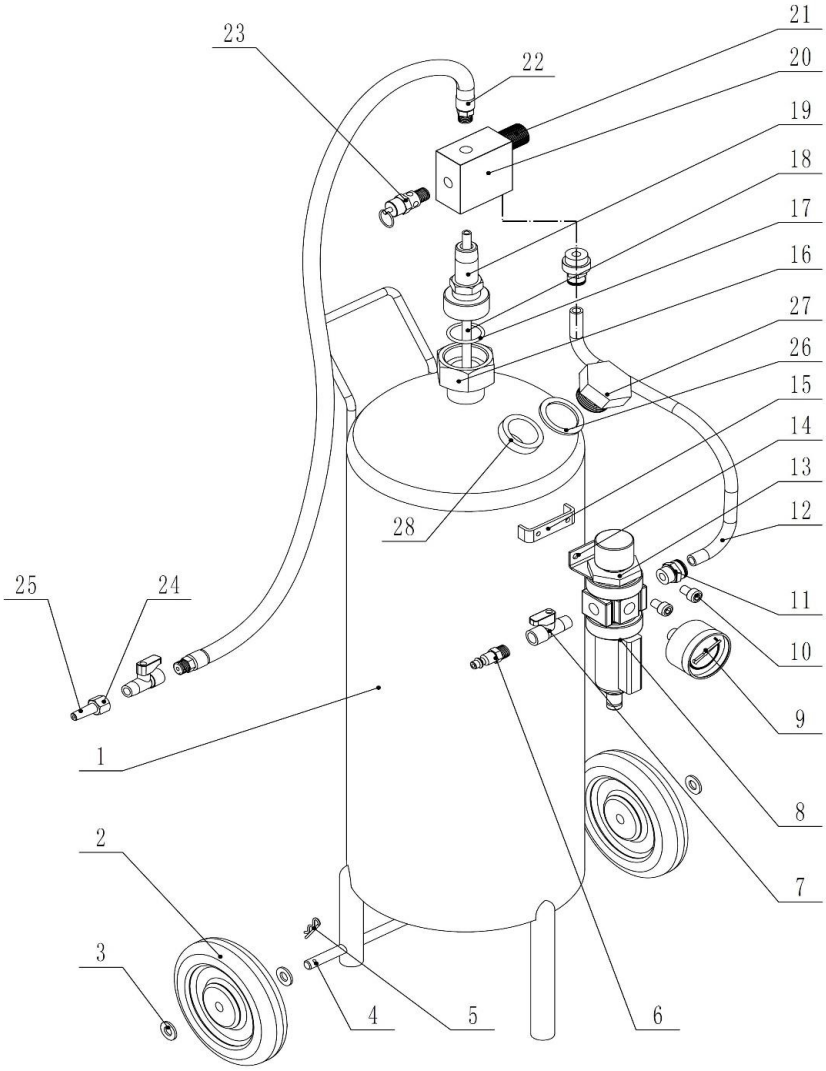

Item	Part No.	Description
1	PSB40.01	STORAGE TANK
2	PSB40.02	WHEEL,FIXED (140x9x32)
3	PSB40.03	WASHER 12mm
4	PSB40.04	WHEEL SHAFT (300mm)
5	PSB40.05	R-RIN
6	PSB40.06	MALE COUPLER 1/4"
7	PSB40.07	ON/OFF VALVE M/F 1/4"
8	PSB40.08	REGULATOR
9	PSB40.09	PRESSURE GAUGE 1/4"
10	PSB40.10	SOCKET HEAD CAP SCREW M6x8
11	PSB40.11	QUICK CONNECT FITTING
12	PSB40.12	AIR HOSE dia.12mm, 360mmL
13	PSB40.13	PRESSURE CAP
14	PSB40.14	BRACKET

Item	Part No.	Description
15	PSB40.15	CONNECTING SEAT
16	PSB40.16	TANK NUT (M42)
17	PSB40.17	O-RING 35x3.1
18	PSB40.18	PICK-UP TUBE 8x710mm
19	PSB40.19	BUSHING 1/2"
20	PSB40.20	REGULATOR
21	PSB40.21	FLOW CONTROL KNOB
22	PSB40.22	HOSE OUTLET
23	PSB40.23	SAFETY VALVE 1/4"
24	PSB40.24	NOZZLE COUPLER
25	PSB40.25	CERAMIC DISCHARGE NOZZLE
26	PSB40.26	TANK PLUG GASKET
27	PSB40.27	PLUG M33
28	PSB40.01	STORAGE TANK

NOTE: It is our policy to continually improve products and as such we reserve the right to alter data, specifications and component parts without prior notice.
IMPORTANT: No liability is accepted for incorrect use of product.
WARRANTY: Guarantee is 12 months from purchase date, proof of which will be required for any claim.

Sealey Group, Kempson Way, Suffolk Business Park, Bury St Edmunds, Suffolk. IP32 7AR
01284 757500 | 01284 703534 | sales@sealey.co.uk | www.sealey.co.uk