SEALEY POWER PRODUCTS

PARTS LIST FOR:

PARAFFIN/DIESEL HEATER

MODEL: **AB160.V2**

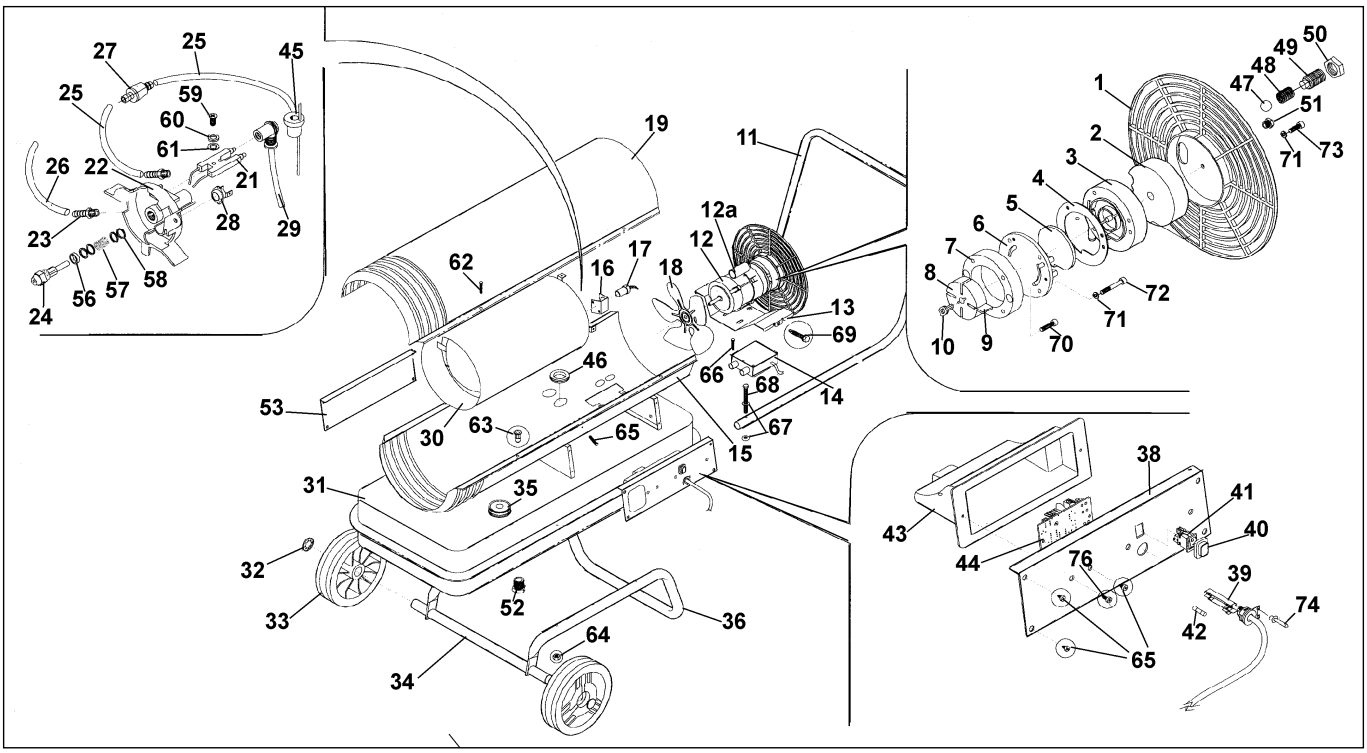

ITEM	PART NUMBER	DESCRIPTION
1	SL1006000311	REAR GRID
2	SL1086001711	SUCTION FILTER
3	SL1094007311	FILTER CASING
4	SL1002001311	GASKET
5	SL1086000111	OUTLET FILTER
6	SL1094007211	COMPRESSOR COVER
7	SL1094008211	STATOR RING TH.21
8	SL1099001811	ROTOR TH.21
9	SL1099001411	BLADE TH.21
10	SL1001008311	COUPLING L.21
11	SLGRY4020	HANDLE
12	SL1040005611	MOTOR 250W 230V 50Hz
12A	SL1049001000	CAPACITOR
13	SL1094006111	MOTOR SUPPORT
14	SL1033004111	TRANSFORMER
15	SL1094077811	LOWER CASING
16	SL1094104211	FLAME SENSOR SUPPORT
17	SL1050000711	FLAME SENSOR
18	SL1087003611	FAN D.254 34 SHAFT D.12.7
19	SL040STD911	UPPER BODY
21	SL1030001111	ELECTRODE
22	SL1094007111	BURNER HEAD
23	SL1067006011	HOSE CONNECTOR
24	SL1088005911	NOZZLE 1,00gph
25	SL1078000211	OIL HOSE L=200mm
26	SL1078000311	AIR HOSE L=480mm
27	SL1086001911	OIL SUCTION FILTER
28	SL1036001611	SAFETY THERMOSTAT
29	SL1039033211	HT CABLE
30	SLGRY041	COMBUSTION CHAMBER
31	SL040STD20	TANK
32	SL1022000911	WHEEL RING
33	SL1004000200	WHEEL 200mm D
34	SLGRY4001	AXLE
35	SL1094004311	TANK CAP
36	SLGRY04020	FRAME

ITEM	PART NUMBER	DESCRIPTION
38	SL028N20	LEFT SIDE PANEL
39	SL1031001800	CABLE CLAMP
40	SL1002002755	SWITCH CAP
41	SL1032001900	SWITCH
42	SL1035001211	FUSE 5A DELAYED ACTION
43	SL1001007736	ELECTRICAL PANEL COVER
44	SL1047003611	FLAME CONTROL UNIT
45	SL1002005711	SUCTION GASKET
46	SL1002002100	RUBBER RING
47	SL1023002411	STEEL BALL 5.4mm
48	SL1023004511	SPRING
49	SL1023002511	ADJUSTING SCREW
50	SL1017002111	NUT
51	SL1067006911	CAP
52	SL1067006911	CAP
53	SL028C20	RIGHT SIDE PANEL
54	SL1005001000	CAP
56	SL1002001111	NOZZLE RUBBER RING
57	SL1023004111	NOZZLE SPRING
58	SL1018001311	WASHER
59	SL1016006000	SCREW
60	SL1018001000	WASHER
61	SL1018001000	WASHER
62	SL1016005211	SCREW
63	SL1019001600	RIVET
64	SL1017000600	NUT
65	SL1016001600	SCREW
66	SL1016005711	SCREW
67	SL1018000800	WASHER
68	SL1016000100	SCREW
69	SL1016004500	SCREW
70	SL1016005011	SCREW
71	SL1018001600	WASHER
72	SL1016005100	SCREW
73	SL1016007700	SCREW
74	SL1019002800	RIVET
76	SL1016001700	SCREW

Issue: 1
Date Issued: 141103

NOTE: *It is our policy to continually improve products and as such we reserve the right to alter data, specifications and component parts without prior notice.*

SEALEY POWER PRODUCTS
Sole UK Distributor
Sealey Group,
Bury St. Edmunds, Suffolk.
01284 757500
01284 703534
www.sealey.co.uk
sales@sealey.co.uk