SEALEY POWER PRODUCTS

PARTS LIST FOR:

PARAFFIN/DIESEL HEATER

MODEL: **AB100.V2**

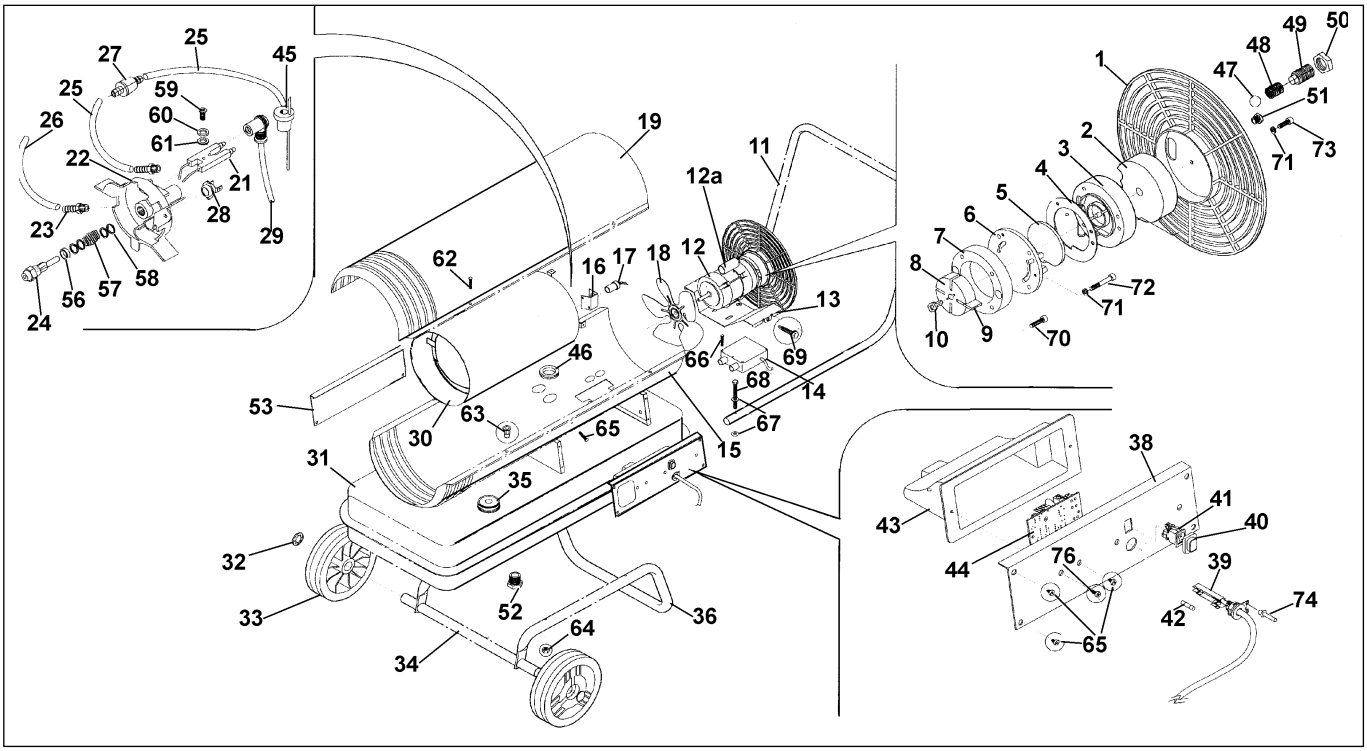

ITEM	PART NUMBER	DESCRIPTION
1	SL1006000211	REAR GRID
2	SL1086001711	SUCTION FILTER
3	SL1094007311	FILTER CASING
4	SL1002001311	GASKET
5	SL1086000111	OUTLET FILTER
6	SL1094007211	COMPRESSOR COVER
7	SL1094008111	STATOR RING TH.17
8	SL1099001611	ROTOR TH.17
9	SL1099001511	BLADE TH.17
10	SL1001008211	ROTOR CLIP
11	SLGRY2820	HANDLE
12	SL1040005511	MOTOR 150W 230V 50Hz
12A	SL1049001000	CAPACITOR
13	SL1094006011	MOTOR SUPPORT
14	SL1033004111	TRANSFORMER
15	SL1094080511	LOWER BODY
16	SL1094014211	FLAME SENSOR SUPPORT
17	SL1050000711	FLAME SENSOR
18	SL1087003511	FAN D.210 34° SHAFT D.12.7
19	SL028STD911	UPPER BODY
21	SL1030001111	ELECTRODE
22	SL1094007111	BURNER HEAD
23	SL1067006011	HOSE CONNECTOR
24	SL1088005711	NOZZLE 0,75gph
25	SL1078000411	OIL HOSE L=200mm
26	SL1078000311	AIR HOSE L=480mm
27	SL1086001911	OIL SUCTION FILTER
28	SL1036001611	SAFETY THERMOSTAT
29	SL1039033211	HT CABLE
30	SLGRY328	COMBUSTION CHAMBER
31	SL028STD20	TANK
32	SL1022000911	WHEEL RING
33	SL1004000311	WHEEL D.175mm
34	SLGRY2801	AXLE
35	SL1094004311	TANK CAP
36	SLGRY02820	FRAME

ITEM	PART NUMBER	DESCRIPTION
38	SL020N20	LEFT SIDE PANEL
39	SL1031001800	CABLE CLAMP
40	SL1002002755	SWITCH CAP
41	SL1032001900	SWITCH
42	SL1035001111	FUSE 3,15A DELAYED ACTION
43	SL1001007736	ELECTRICAL PANEL COVER
44	SL1047003611	CONTROL UNIT
45	SL1002005711	SUCTION GASKET (25mm diameter)
46	SL1002002100	RUBBER RING
47	SL1023002411	STEEL BALL 5.4mm
48	SL1023004511	SPRING
49	SL1023002511	ADJUSTING SCREW
50	SL1017002111	NUT
51	SL1067006911	CAP
52	SL1067006911	DRAIN CAP
53	SL028C20	RIGHT SIDE PANEL
54	SL1005001000	CAP
56	SL1002001111	NOZZLE RUBBER RING
57	SL1023004111	NOZZLE SPRING
58	SL1018001311	WASHER
59	SL1016006000	SCREW
60	SL1018001000	WASHER
61	SL1018001000	WASHER
62	SL1016005211	SCREW
63	SL1019001600	RIVET
64	SL1017000600	NUT
65	SL1016001600	SCREW
66	SL1016005711	SCREW
67	SL1018000800	WASHER
68	SL1016000100	SCREW
69	SL1016004500	SCREW
70	SL1016005011	SCREW
71	SL1018001600	WASHER
72	SL1016005100	SCREW
73	SL1016007700	SCREW
74	SL1019002800	RIVET
76	SL1016001700	SCREW

Issue No: 1
Date Issued: 141103

NOTE: *It is our policy to continually improve products and as such we reserve the right to alter data, specifications and component parts without prior notice.*

SEALEY POWER PRODUCTS
Sole UK Distributor
Sealey Group,
Bury St. Edmunds, Suffolk.
01284 757500
01284 703534
www.sealey.co.uk
sales@sealey.co.uk